DO NOT SCALE

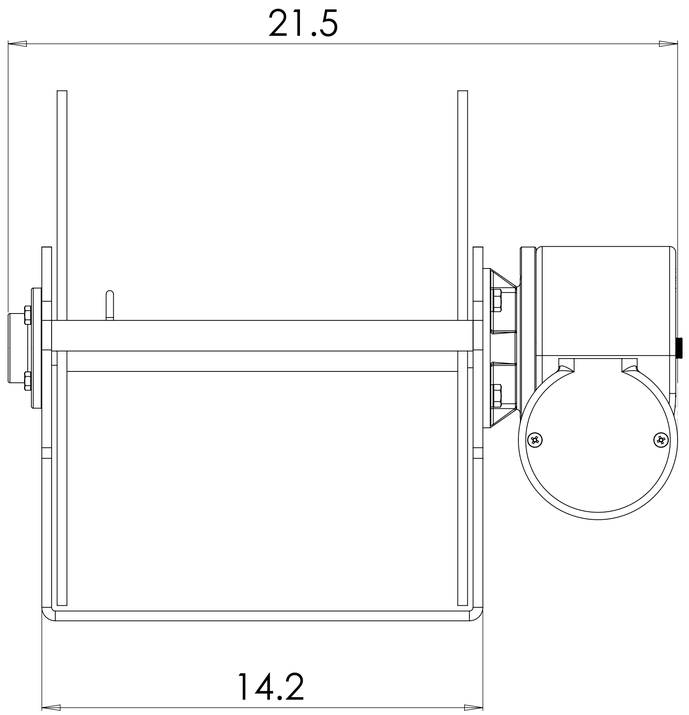

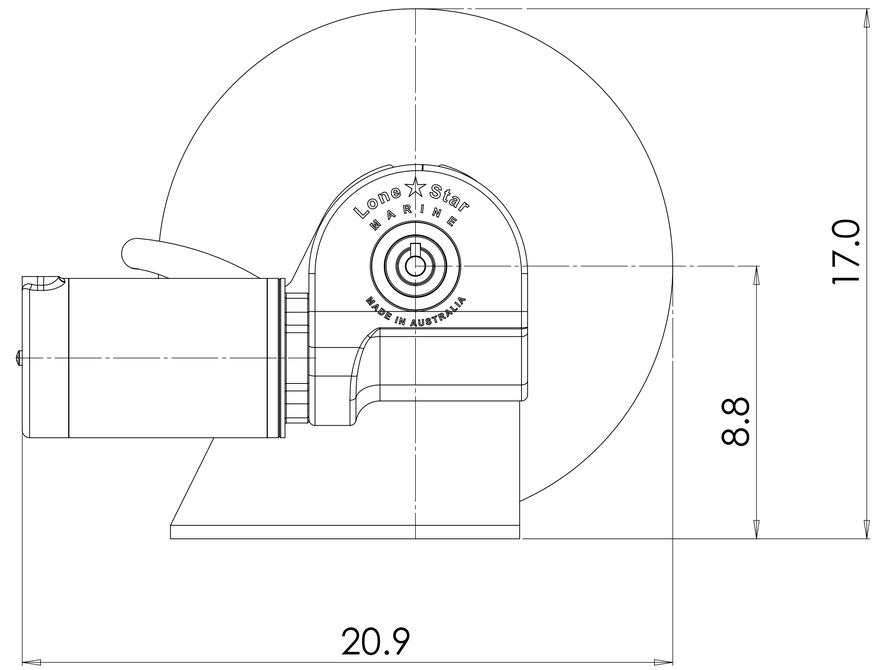

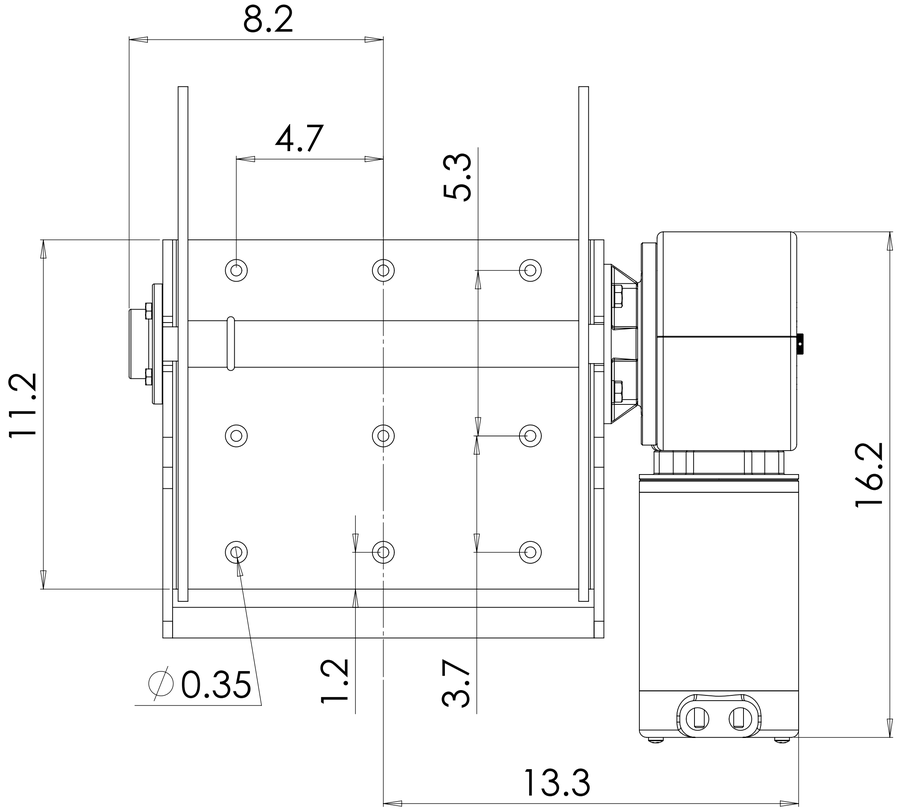

This document and it's contents are the property of Lone Star Marine,they are protected by design registration and copyright, any form of disclosure to any third party is strictly prohibited unless written permission is given from Lone Star Marine.

UNLESS OTHERWISE SPECIFIED:
DIMENSIONS ARE IN MILLIMETERS
SURFACE FINISH:
TOLERANCES:
LINEAR:
ANGULAR:

FINISH:

DEBUR AND BREAK SHARP EDGES

DO NOT SCALE DRAWING

REVISION

	NAME	SIGNATURE	DATE
DRAWN	CHRIS		- - 2015
CHK'D			
APPV'D			
MFG			
Q.A			

MATERIAL:

WEIGHT:

TITLE:

DWG NO: ELITE 5 FIT UP_1A

A1

SCALE:1:5

SHEET 1 OF 1